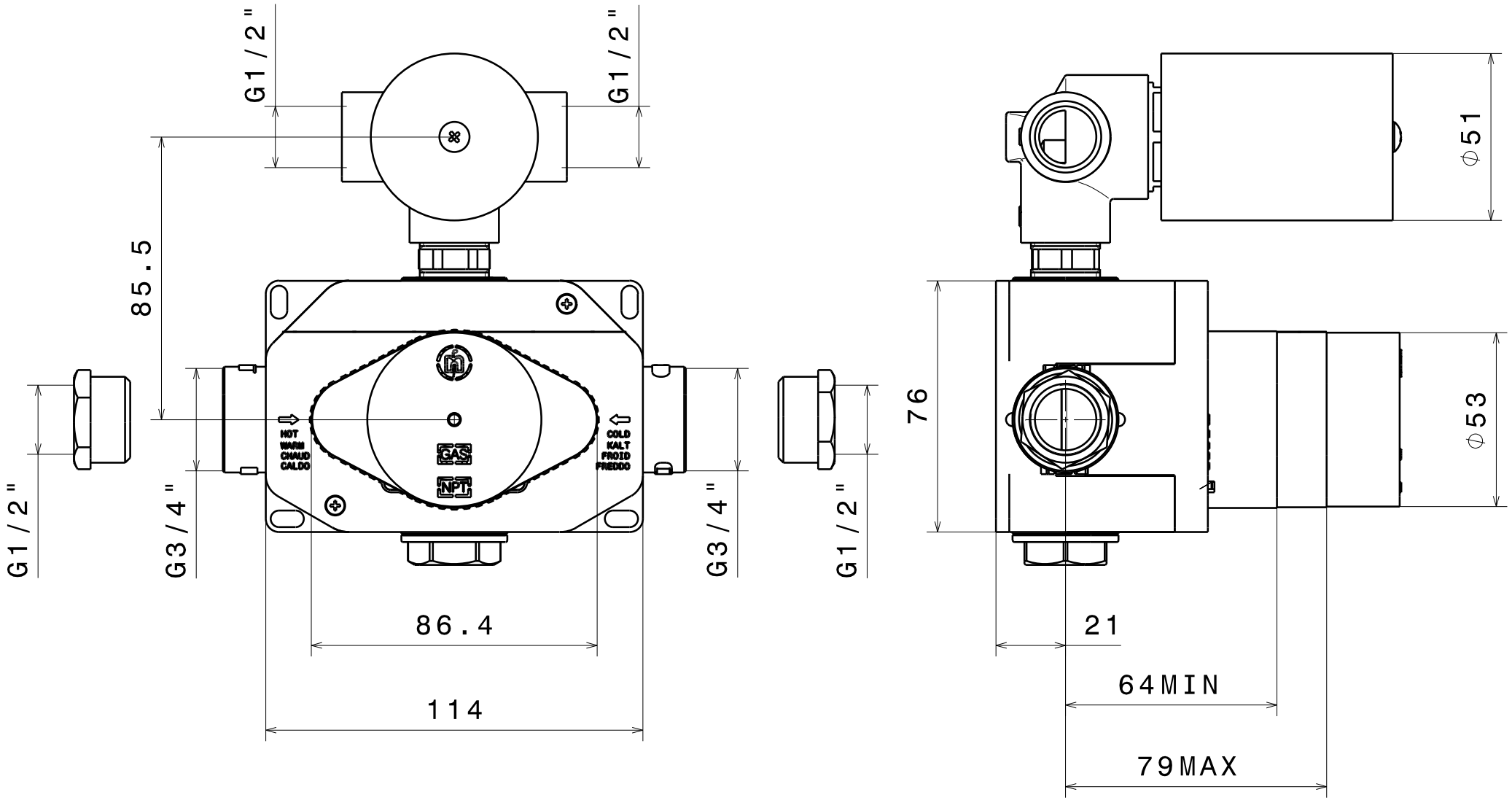
G1/2"
G1/2"
85.5
G1/2"
G3/4"
HOT
WARM
CHAUD
CALDO
GAS
NPT
COLD
KALT
FROID
FREDDO
G3/4"
G1/2"
86.4
114
76
21
64MIN
79MAX
ϕ51
ϕ53

27886